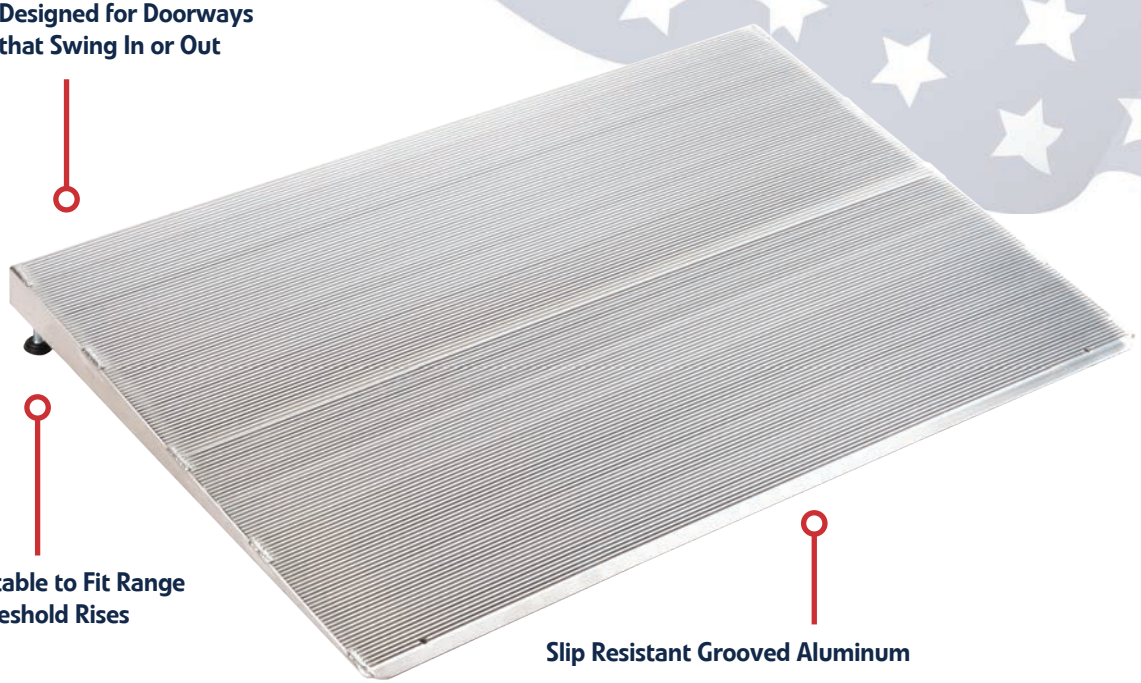

FEATURES

- Accommodates wheelchairs and scooters with various wheel configurations
- Aligns directly against the door threshold

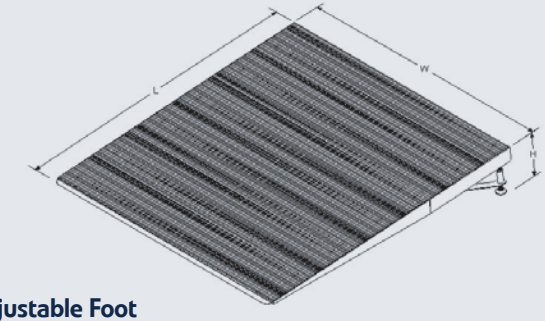

Adjustable Foot

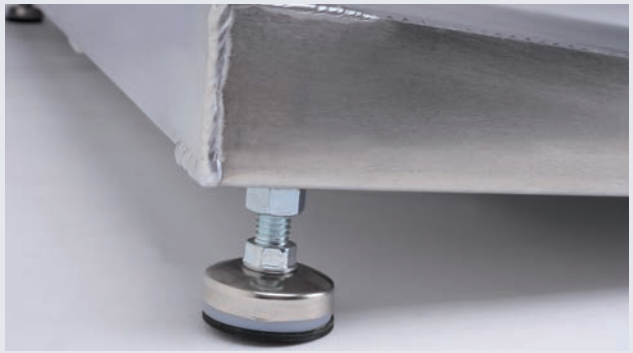

Item Number	Length	Width	Threshold Height	Weight	Capacity*
ATH1232	12"	32"	1-5/8" - 2-3/8"	6 lbs.	800 lbs.
ATH1236	12"	36"	1-5/8" - 2-3/8"	8 lbs.	800 lbs.
ATH2432	24"	32"	2-3/8" - 3½"	12 lbs.	800 lbs.
ATH2436	24"	36"	2-3/8" - 3½"	14 lbs.	800 lbs.
ATH3632	36"	32"	3" - 6"	19 lbs.	800 lbs.
ATH3636	36"	36"	3" - 6"	21 lbs.	800 lbs.
ATH4832	48"	32"	4" - 6"	26 lbs.	800 lbs.
ATH4836	48"	36"	4" - 6"	28 lbs.	800 lbs.

Not sure which ramp length you need? Refer to pages 13-14 to help you.
* Maximum ramp capacity: 400 lbs. (One axle) – 800 lbs. (Two axles).