FEATURES

- Full platform provides excellent stability
- Anti-slip, high traction surface
- Accommodates wheelchairs and scooters with various wheel configurations
- Safety DVD and steel security pins included
- Fits in the trunk of most cars

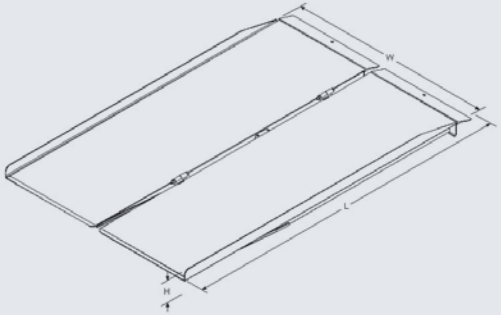

In Use





Folds in Half, Carries like a Suitcase*

Durable Welded Construction

Lightweight, Easy-to-handle & Set Up

Item Number	Length	Width	Folded Size	Weight	Capacity**
SFW230*	2′	30″	24″ x 16″ x 4-7/8″	10 lbs.	800 lbs.
SFW330	3′	30″	36″ x 16″ x 4-7/8″	16 lbs.	800 lbs.
SFW430	4′	30″	48″ x 16″ x 4-7/8″	22 lbs.	800 lbs.
SFW530	5′	30″	60″ x 16″ x 4-7/8″	28 lbs.	800 lbs.
SFW630	6′	30″	72″ x 16″ x 4-7/8″	33 lbs.	800 lbs.

Not sure which ramp length you need? Refer to pages 13-14 to help you.
*Handle not included on SFW230. ** Maximum ramp capacity: 400 lbs. (One axle) – 800 lbs. (Two axles).