## FEATURES

- Closure strap locks ramp panels together
- Easy-to-handle & set up
- Durable welded construction
- Accommodates wheelchairs and scooters with various wheel configurations
- Safety DVD and steel security pins included

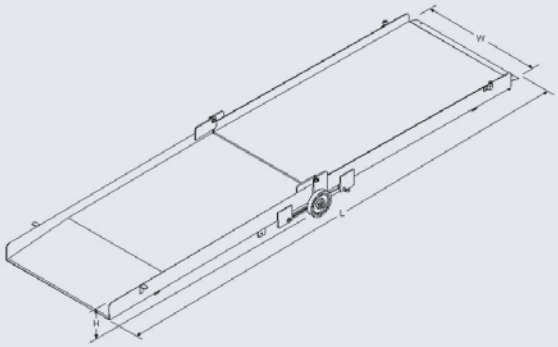

**In Use**



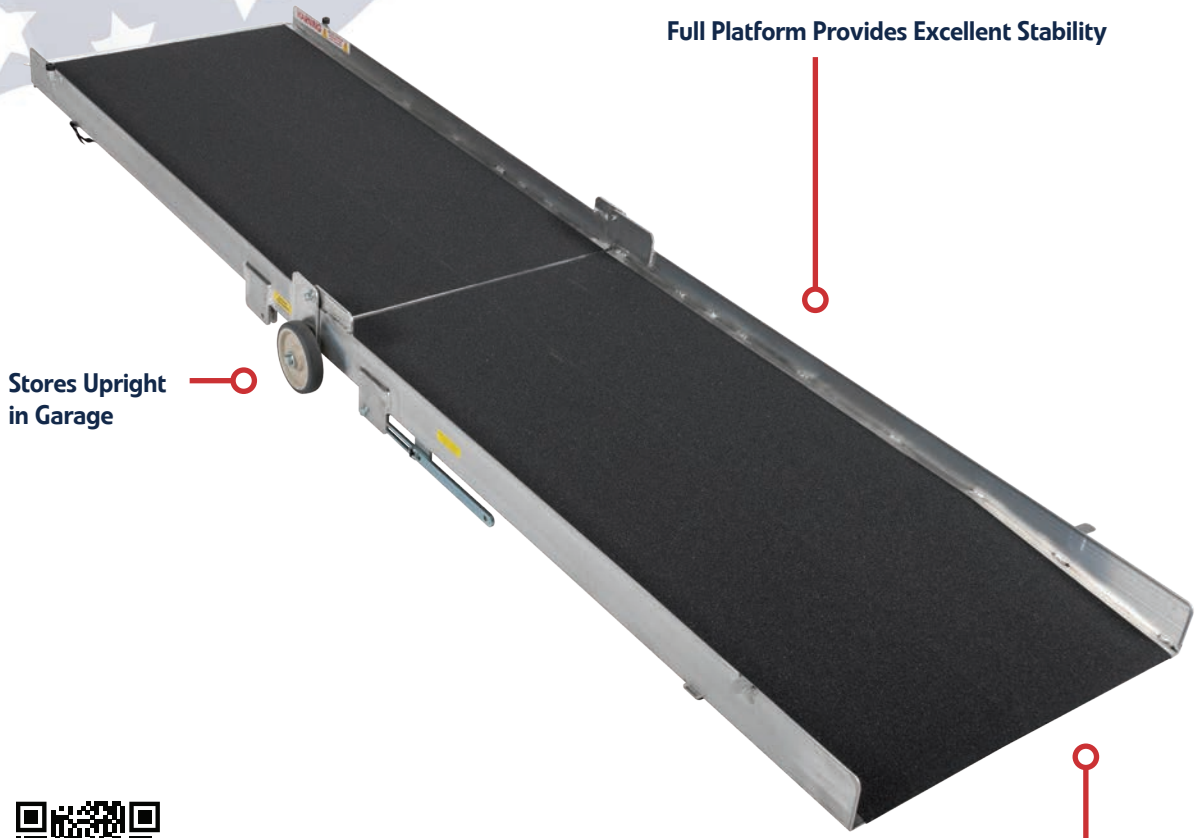


| Item Number | Top Hook Length | Length | Width | Folded Size | Weight | Capacity* |
|---|---|---|---|---|---|---|
| WAB1030 | 2-3/4" | 10' | 30" | 66-1/4" x 36-3/4" x 16" | 84 lbs. | 600 lbs. |
| WAB1230 | 2-3/4" | 12' | 30" | 78-1/4" x 36-3/4" x 16" | 98 lbs. | 600 lbs. |
| WABU1030 | 9-3/4" | 10' | 30" | 63-1/4" x 36-3/4" x 16" | 83 lbs. | 600 lbs. |
| WABU1230 | 9-3/4" | 12' | 30" | 75-1/4" x 36-3/4" x 16" | 97 lbs. | 600 lbs. |

Not sure which ramp length you need? Refer to pages 13-14 to help you.
* Maximum ramp capacity: 300 lbs. (One axle) – 600 lbs. (Two axles).