QUICK CHANGE

XCHANGER® COMBO KIT

XLERATOR®/XLERATOReco® HAND DRYER XCHANGER COMBO KIT

(HAND DRYER NOT INCLUDED)

The XChanger Combo Kit allows you to completely retrofit your paper dispenser and waste receptacle with the XLERATOR or XLERATOReco Hand Dryer. This panel is easily installed over the space left by the former paper dispenser and will not cause damage to the existing wall surface. The XLERATOR or XLERATOReco Hand Dryer with ADA-compliant Recess Kit is installed into the XChanger leaving your restroom modern, clean and green.

XLERATOR®/XLERATOReco® HAND DRYER
XCHANGER® COMBO KIT

(XLERATOR Sold Separately)

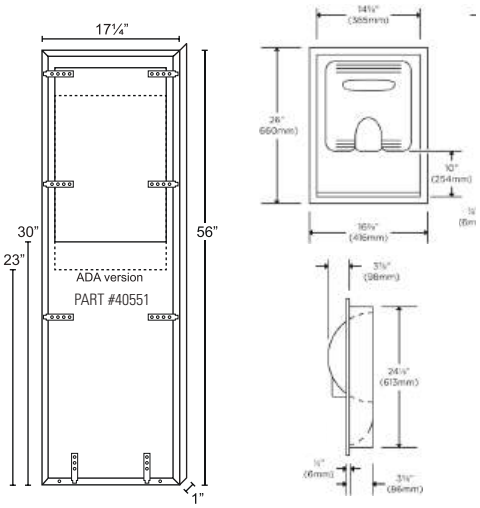

PART #40550 - STANDARD
PART #40551 - ADA HEIGHT

PART #40505

PART #40576

PART #40575

(XLERATOR Sold Separately)

	Code Options
B	*Black Painted*
W	*White Painted*
GR	*Graphite Textured Paint*
R	*Red Baron Paint*
SP	*Custom Special Paint*

XCHANGER COMBO KIT ♿

Allows you to completely retrofit your paper towel dispenser and waste receptacle with the XLERATOR/XLERATOReco. The XChanger is easily installed over the space left behind by the paper towel dispenser and will not cause damage to the existing wall surface. The XChanger Kit is also available in an ADA height-compliant version, allowing full access for users in wheelchairs.

Part ID	Description
40505	**Recess Kit, Brushed Stainless Steel** (for ADA 4" protrusion requirements)
40550	**XChanger, Brushed Stainless Steel** (Use with #40505 Recess Kit)
40551	**XChanger, Brushed Stainless Steel, ADA Height** (Use with #40505 Recess Kit)
40575	**XChanger Combo Kit:** Comes with ADA Recess Kit #40505 and Standard XChanger #40550
40575SP	Custom Paint XChanger Combo Kit
40576	**ADA XChanger Combo Kit:** Comes with ADA Recess Kit #40505 and ADA Height XChanger #40551
40576SP	Custom Paint XChanger Combo Kit

[1]Special paint colors include white, raven black, red baron and graphite. Custom paint colors are also available and require a minimum order of 5 or more. Call Excel Dryer for custom paint color options and pricing.

XCHANGER SPECIFICATIONS

Weight: 17 Lbs. (7.7 kg)

Overall Dimensions: 17 ¼" wide x 56" high x 1" deep

Rough Wall Opening for New Construction: 15 7/8" wide x 54 5/8" high. The XChanger should be mounted approximately 5" from the floor.

Installation Guide (Consult local ADA codes):
The XChanger is a retrofittable conversion kit which will enable you to update your existing paper towel dispenser and waste receptacle to an XLERATOR or XLERATOReco Hand Dryer. Used in conjunction with the Recess Kit, the XChanger is installed over the footprint of common paper towel dispenser/waste receptacles designed to match their dimensions so there is little or no wall repair required once the XChanger kit is installed.

ADA Height XChanger Kit: The XChanger also comes in an ADA version. The opening to the unit is 7" lower to allow the recess kit and XLERATOR or XLERATOReco Hand Dryer to be ADA-compliant. Check local regulations for actual ADA compliance rules.

CONSTRUCTION

XChanger is fabricated of 18 gauge 18-8 type 304 stainless steel with #4 satin finish. All welded construction.

RECESS KIT SPECIFICATIONS

Width: 16 ⅜" (416 mm) **Height:** 26" (660 mm)

Depth: 3 ⅜" (86 mm) **Weight:** 11 lbs. (4.99 kgs.)

Installation Guide (Consult local ADA codes):
An ADA-compliant Recess Kit for XLERATOR or XLERATOReco Hand Dryer models that adheres to the 4" protrusion ADA guidelines in a restroom walkway and helps keep water off the wall and floor. When installed, bottom of hand dryer will be 10" (254 mm) above bottom of rough wall opening. Therefore, bottom of rough wall opening should be 10" (254 mm) below suggested mounting height for hand dryer. (See suggested mounting heights above).

CONSTRUCTION

Wall box is fabricated of 22 GA 18-8 type 304 stainless steel with #4 satin finish with 16 GA 18-8 type. All welded construction.

NATIONAL INSTALLATION SERVICES AVAILABLE • CALL FOR DETAILS 800-255-9235